Flat Top

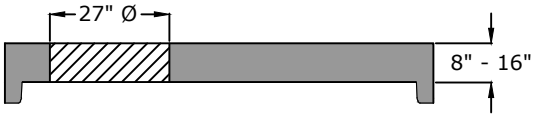

Flat Top
8" - 4,000 lb
10" - 5,000 lb
12" - 6,000 lb
16" - 8,000 lb

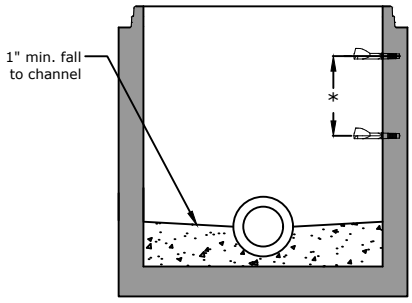

Manhole Base Preformed Invert Detail

Riser

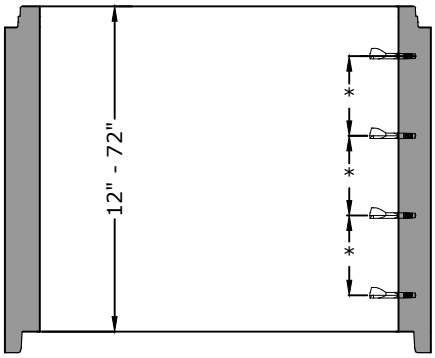

Riser Weights
12" - 18,50 lb
16" - 2,450 lb
24" - 3,650 lb
32" - 4,850 lb
36" - 5,450 lb
48" - 7,250 lb
60" - 9,050 lb
64" - 9,650 lb
72" - 10,900 lb

Monolithic Base

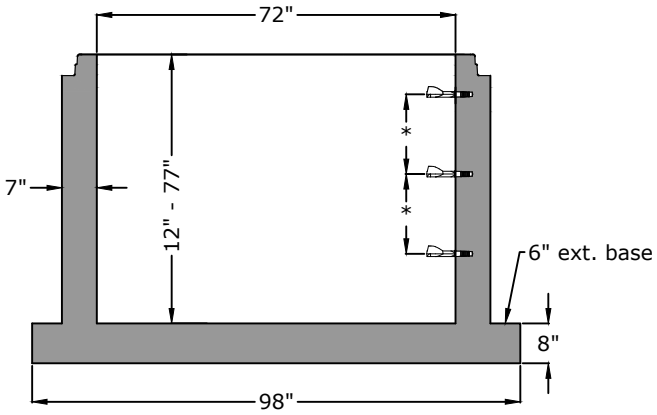

Base Weights
12" - 7,050 lb
16" - 7,650 lb
24" - 8,850 lb
32" - 10,100 lb
36" - 10,700 lb
48" - 12,500 lb
60" - 14,300 lb
64" - 14,900 lb
72" - 16,100 lb

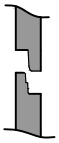

Joint

Approved for Production

Project:_____ **Date:**_____

Quantity:_____ **By:**_____

Drawn by: Eric Barger | **Date:** 08.012024

Concrete: 5,000 psi minimum 28 day compressive strength
Reinforcing: Per ASTM C478 with design calculations performed by a Licensed P.E. Minimum 2" cover of all reinforcing steel.
Pipe Penetrations: All pipe penetrations are placed according to job requirements.
Pipe Seals: All pipe boots will meet ASTM C 923.
Sealant: Sealant used will meet ASTM C 990.
Steps: On 16" centers unless otherwise specified.
Preformed Invert: As required by plans or governing specifications.

BARGER PRECAST

P.O. Box 370 - Kingston TN 37763
Phone 888.882.5860 - BargerPrecast.com

72" I.D. Manhole - Extended Base Slab
ASTM C-478 Compliant