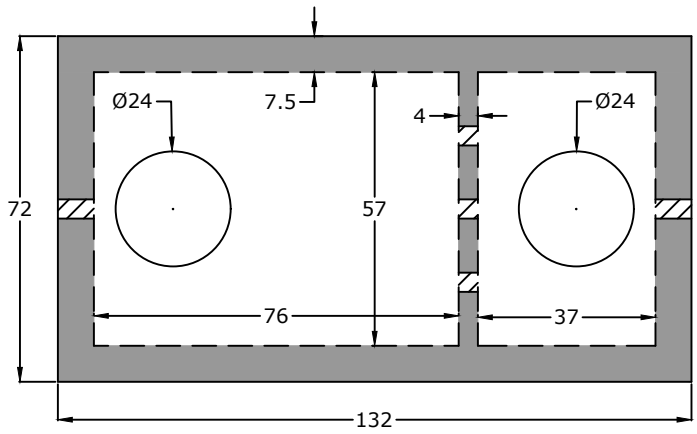

Top View

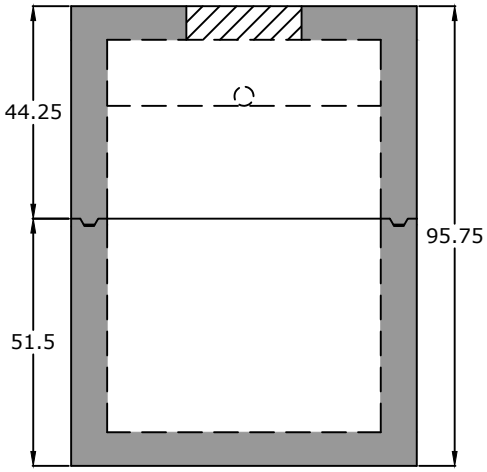

End View

Notes:
ASTM C 1613 Compliant
HS20 Traffic Rated
4" Inlet/Outlet (Standard)
4" PVC 90 in Baffle Wall
2/3 - 1/3 Compartment Capacity

Stencil:
[Date of manufacture]
2000 Gallons HS20
150 lb/sq ft
Max Cover: 8 ft
[Inlet/Outlet Size]
"Inlet" and "Outlet"

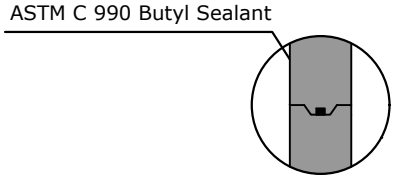

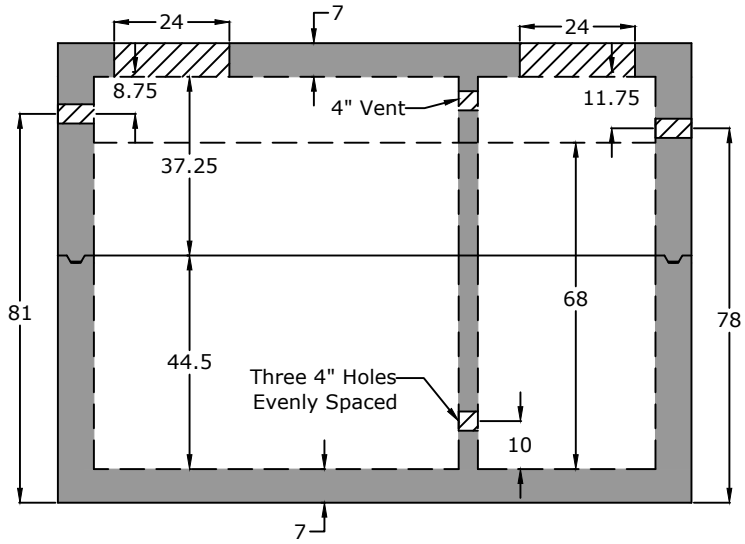

Side View

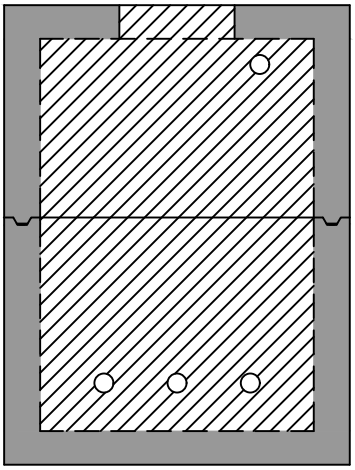

Baffle View

Specifications

Concrete: 5,000 psi minimum strength (28 day)
Reinforcing: Primary reinforcement will be rebar.
Risers: Grade rings and manhole frames and covers sold separately.
Sealant: Sealant used in the seam of the tank will meet or exceed ASTM C990.
Pipe Penetrations: Inlet and outlets are fitted with seals that meet or exceed all ASTM C923 specifications.
Partition Wall: The partition wall, if present, is poured monolithically.
Drawing: All measurements are accurate within ± 1 inch.

Tank Warranty: See Terms and Conditions.

Centroid(s): Lid (67, 36), Base (67, 36)

BARGER PRECAST

P.O. Box 370 - Kingston TN 37763
Phone 888.882.5860 - BargerPrecast.com

Weights
Top - 14,928 lb
Bottom - 17,372 lb

Anti-Float Protection
3" of water

Installation: The tank hole is not to be more than 18 in. longer and wider than the tank. There shall be a minimum of 6" of 3/4" stone bedding. This tank is designed for HS20 traffic loads and with a max backfill cover of 8' and a minimum of 6".

2,000 Gallon HS20 Grease Trap
Hamilton County WWTA - Hamilton County, TN

Date:	Drawn By:	Updated:
12.202012	Eric Barger	7.222024